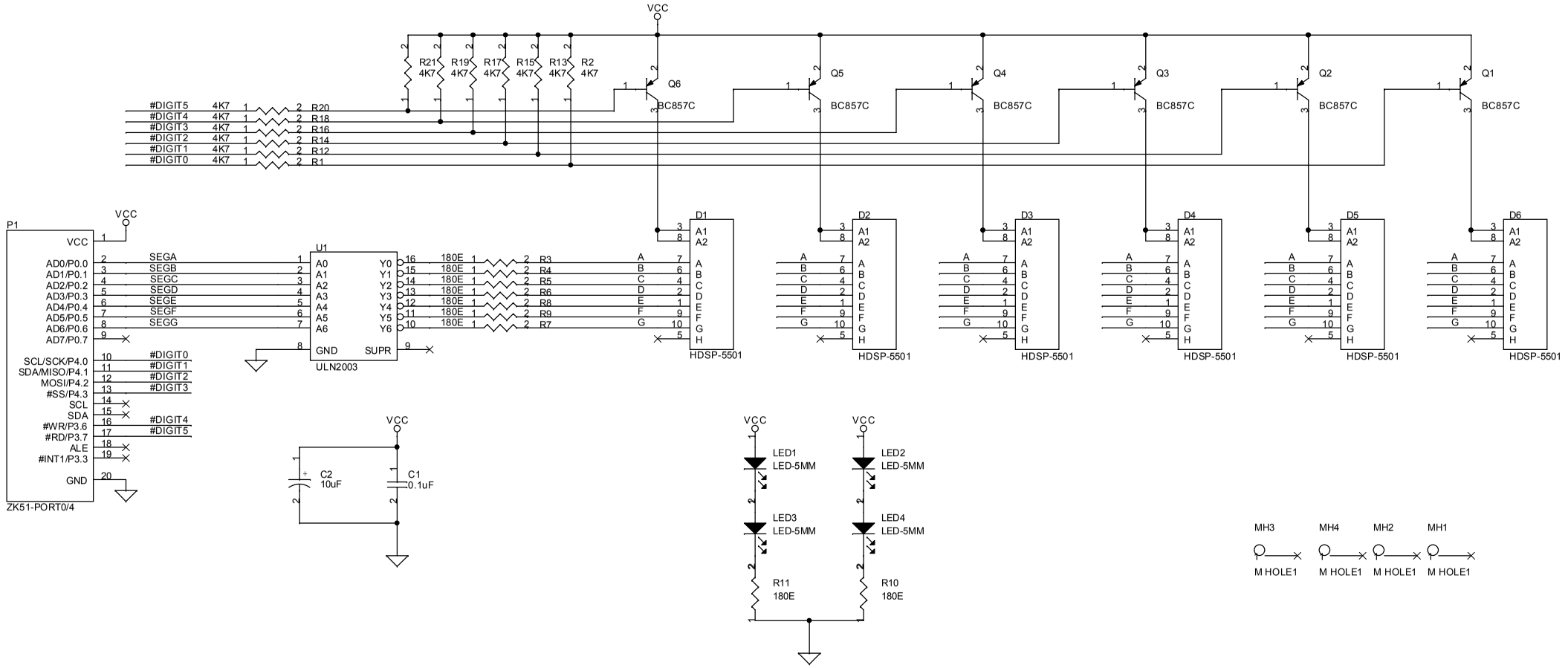

ZILOGIC SYSTEMS

Zilogic Systems Private Limited

Title	ZKIT51-AX0201A	
Size B	Document Number 89V664	Rev A
Date: Saturday, May 16, 2009	Sheet 1 of 4	